VTK-S

Stroke plate according to VDI 3357, steel hardened

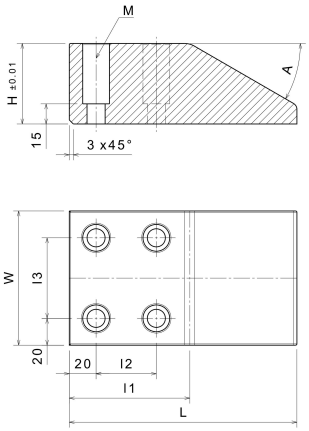

Product discription:

Stroke plate according to VDI 3357, steel hardened

Article properties:

Base Material	Steel, hardened
Self-lubricating	No

Variants:

Articlenumber	Article name	Width W	Length L	Height H	Angle a	I1	I2	I3	M (ISO 4762)
21214800300	VTK-S 100-170-45	100	170	45	20°	90	45	60	4xM12
21214800310	VTK-S 125-170-45	125	170	45	20°	90	45	85	4xM12
21214800320	VTK-S 150-170-45	150	170	45	20°	90	45	110	4xM12
21214802340	VTK-S 100-150-45	100	150	45	30°	90	45	60	4xM12
21214803350	VTK-S 100-170-60	100	170	60	30°	90	45	60	4xM12
21214805360	VTK-S 125-150-45	125	150	45	30°	90	45	85	4xM12
21214806370	VTK-S 125-170-60	125	170	60	30°	90	45	85	4xM12
21214808380	VTK-S 150-150-45	150	150	45	30°	90	45	110	4xM12
21214809390	VTK-S 150-170-60	150	170	60	30°	90	45	110	4xM12